DL
2018_10

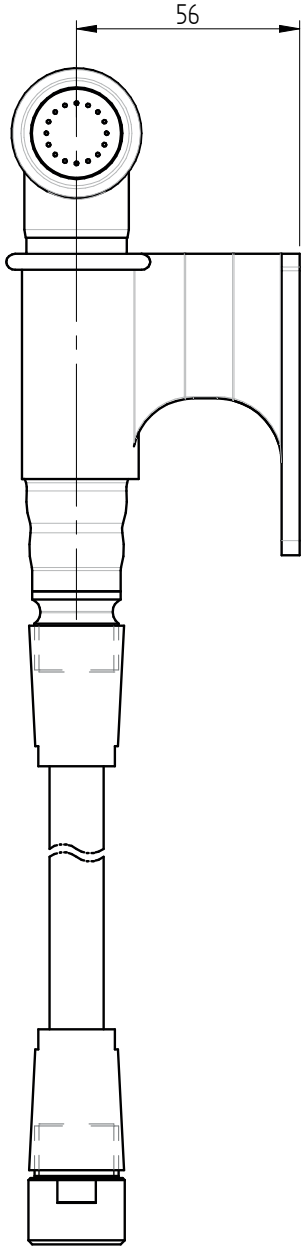
56

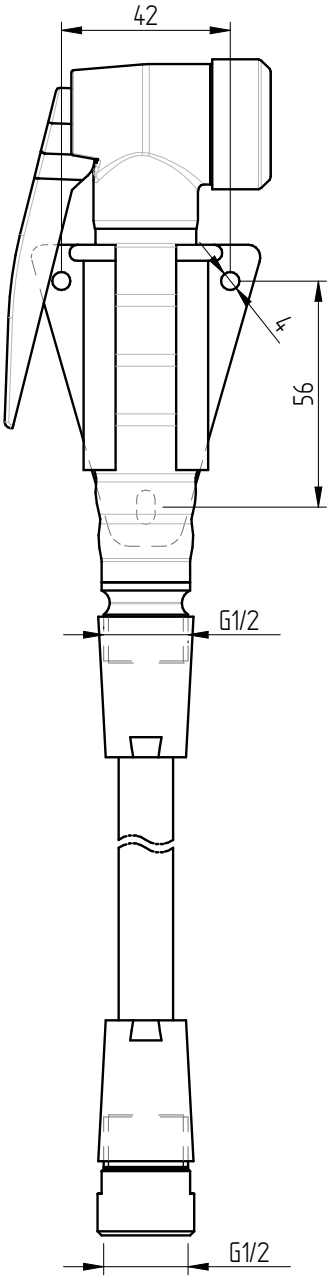
42
4
56
G1/2
G1/2

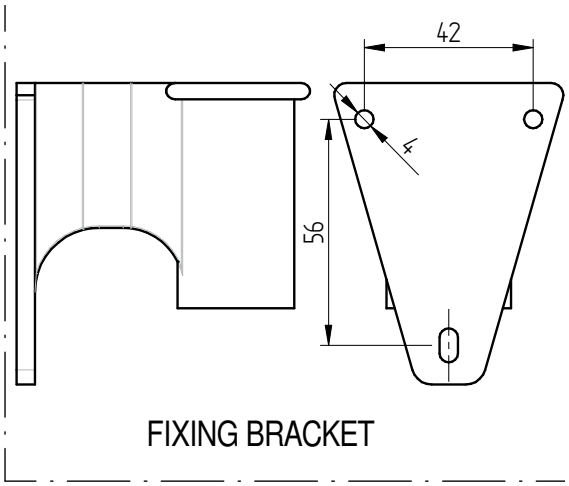
42
4
56
FIXING BRACKET

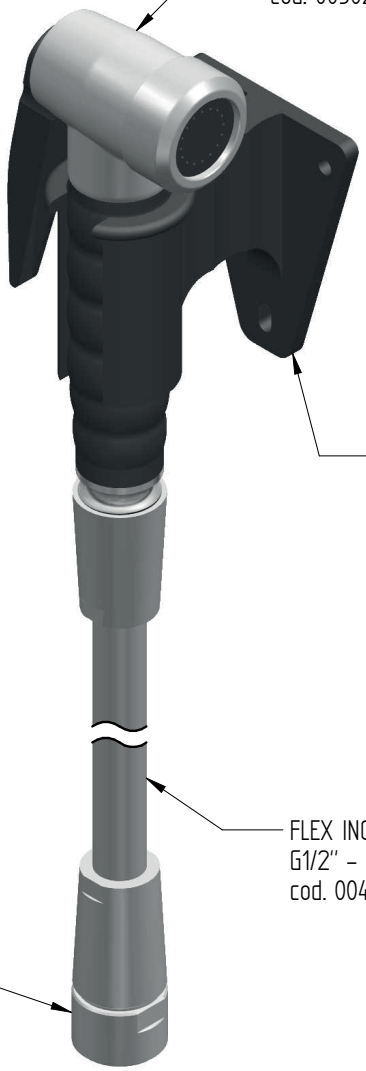
SHOWER
cod. 00502000003
FIXING BRACKET
cod. 00506000004
FLEX INOX+PVC
G1/2" - G1/2" L=200cm
cod. 00403000011
G1/2" NON-RETURN VALVE
cod. R0701030409