MCH
2020_08

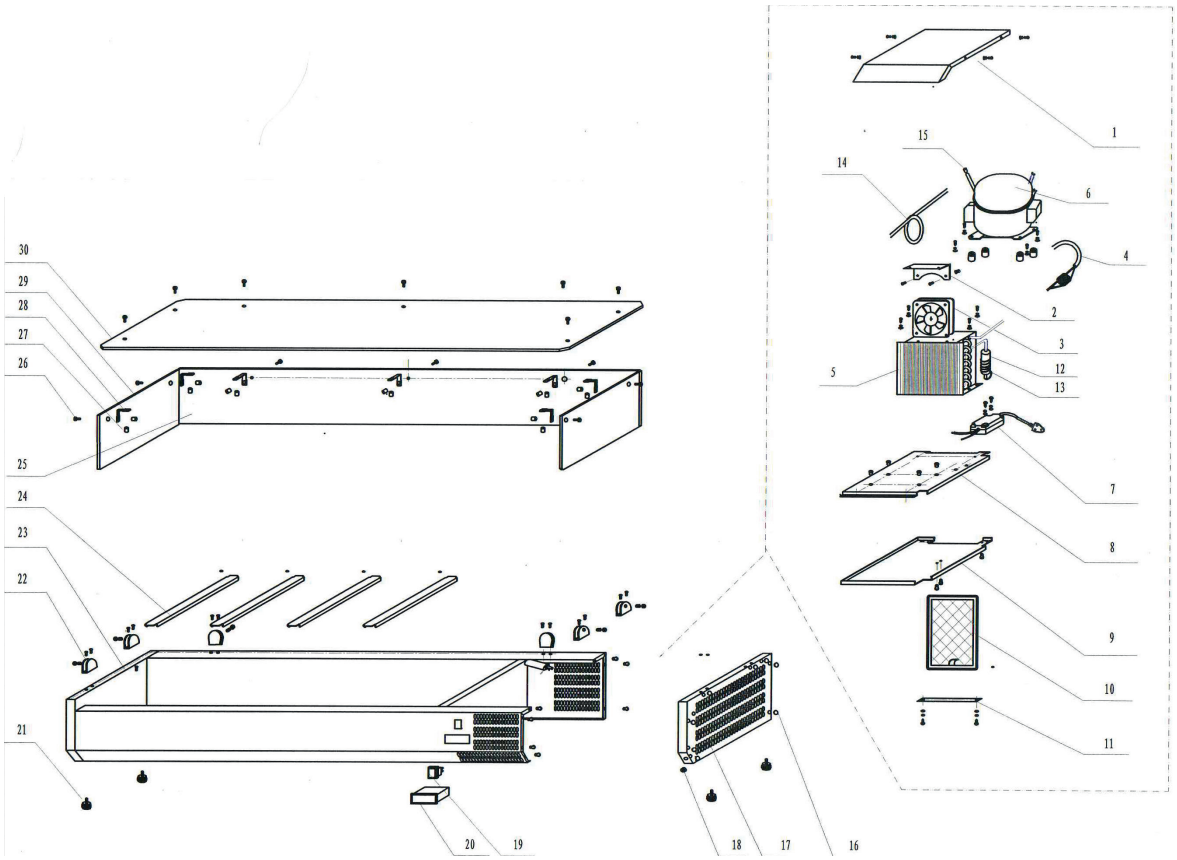
30
29
28
27
26
25
24
23
22
21
20
19
18
17
16
15
14
1
6
4
2
3
12
13
5
7
8
9
10
11

MCH
2020_08

Pozice	Název	
1	UNIT ROOM COVER	
2	FAN FIX PLATE	
3	EVAPORATOR FAN	
4	HIGH PRESSURE PIPE	
5	CONDENSER	
6	COMPRESSOR	
7	WIRE BOX	
8	CONDENSER UNITE PLATE	
9	UNIT BOARD	
10	FILTER	
11	REINFORCE BOARD	
12	FILTER DRIER	
13	CAPILLARY	
14	GAS RETURE PIPE	
15	GAS FILLED PIPE	
16	SCREWS COVER	
17	RIGHT SIDE	
18	WIRE POTECT PIPE	
19	MAIN SWITCH	
20	THERMOSTAT	
21	ADJUSTABLE FEET	
22	GLASS FIX	
23	BODY	
24	PAN HOLDER	
25	BACK GLASS	
26	GLASS SCREWS	
27	GLASS SCREWS	
28	GLASS CONNECTION PARTS	
29	SIDE GLASS	
30	TOP GLASS	