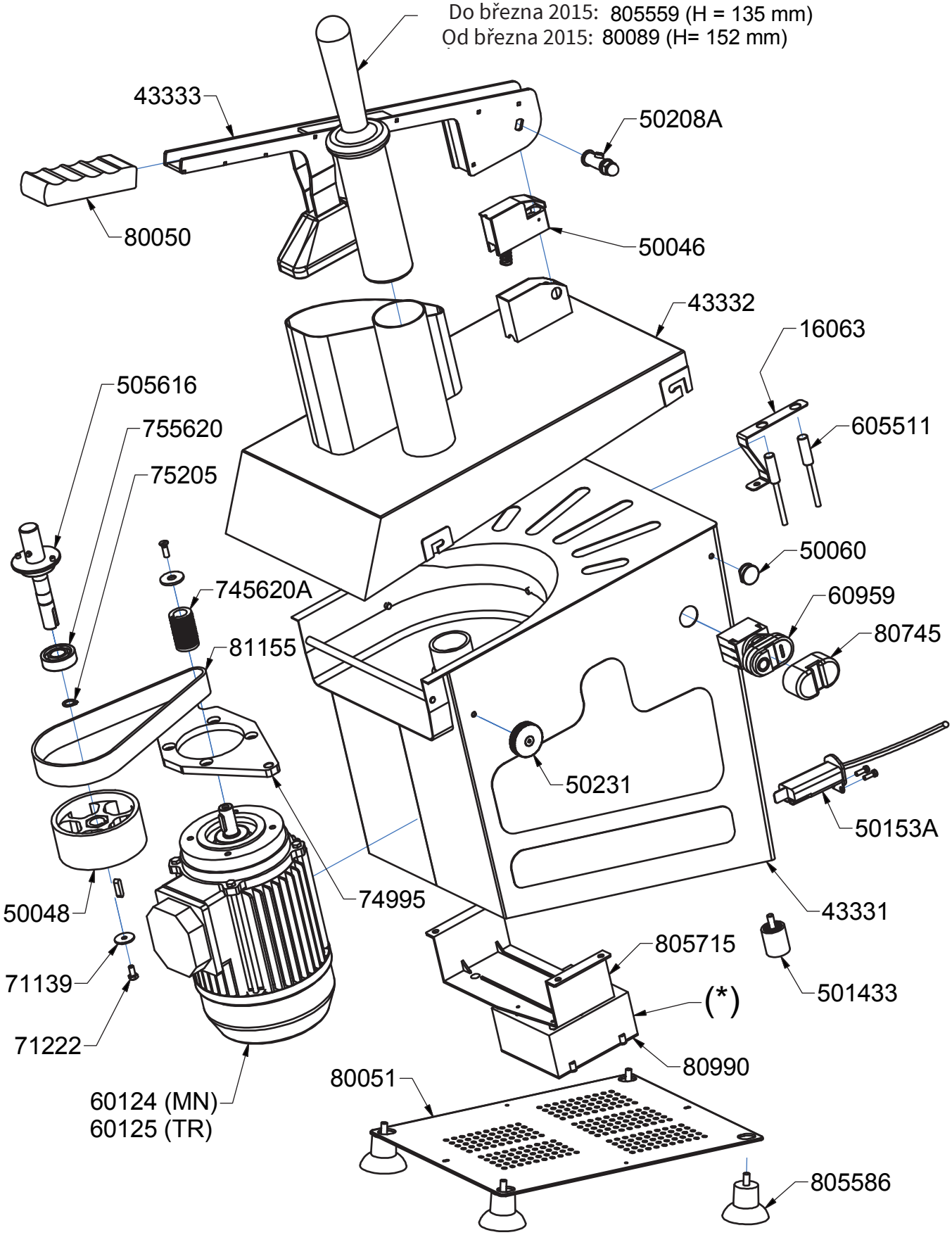PSR 800
2020_03